1.0 GENERAL NOTES
- 1.1 ALL METRIC DIMENSIONS ARE IN BRACKETS [X. X]
- 1.2 FOR PATENT INFO: https://www.adwpat.com

2.0 DESIGN NOTES

3.0 MANUFACTURING/SPECIAL REQUIREMENTS
- 3.1 TIGHTEN ALL BOLTS 3/8" OR LARGER SECURING FLAT PLATES SNUG TIGHT. TIGHTEN ALL U-BOLTS/THREADED RODS SNUG TIGHT, WITH ATTENTION TO LEAVE EQUAL DISTANCE AND EQUAL FORCE ON EACH LEG OF U-BOLT/THREADED ROD.
- 3.2 SNUG TIGHT IS DEFINED AS THE CONDITION OBTAINED WITH A FEW IMPACTS OF AN IMPACT WRENCH OR THE FULL EFFORT OF AN INSTALLER USING AN ORDINARY SPUD WRENCH TO BRING THE CONNECTED LAYERS (PLIES) OF STEEL INTO FULL CONTACT.
- 3.3 FOR BOLTS IN A PATTERN, TIGHTEN IN A CRISS-CROSS OR STAR SEQUENCE, INCREASING TORQUE IN GRADUAL STEPS UNTIL SNUG TIGHT.

4.0 TEST

5.0 PACKAGING
- 5.1 PACKAGING SHALL MEET ANDREW REQUIREMENTS PER DOCUMENT IS-PL-3005
- 5.2 PRINTED DOCUMENT TO BE PLACED INSIDE POLYBAG AND THEN IN SHIPPING CONTAINER
- 5.3 EXTRA HARDWARE MAY BE SUPPLIED, BAGGED AND SHIPPED

REVISIONS			
REV.	DESCRIPTION	DATE	APPROVED
A	INITIAL RELEASE	RJC 21MAY21	12678
B	UPDATED DRAWING FORMAT	YX1027 16JAN26	BA1025 50106610AMO

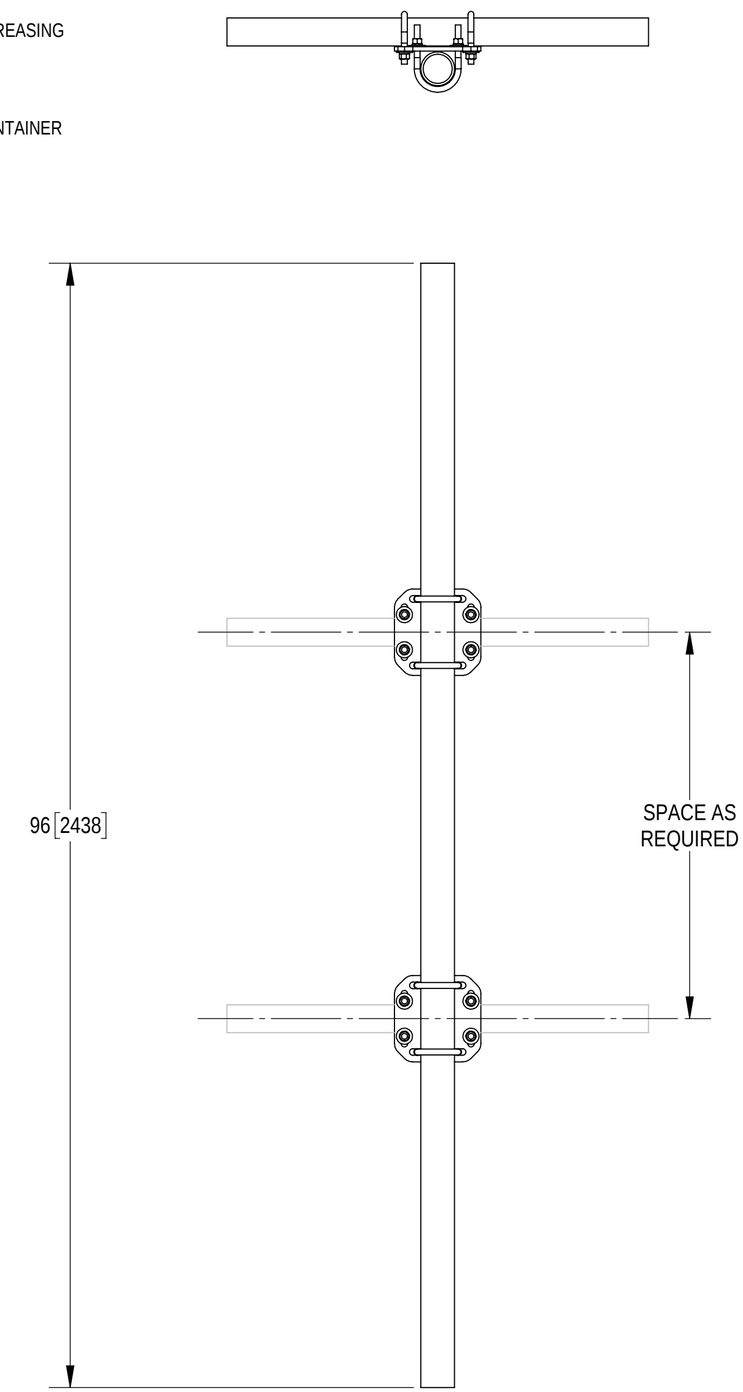

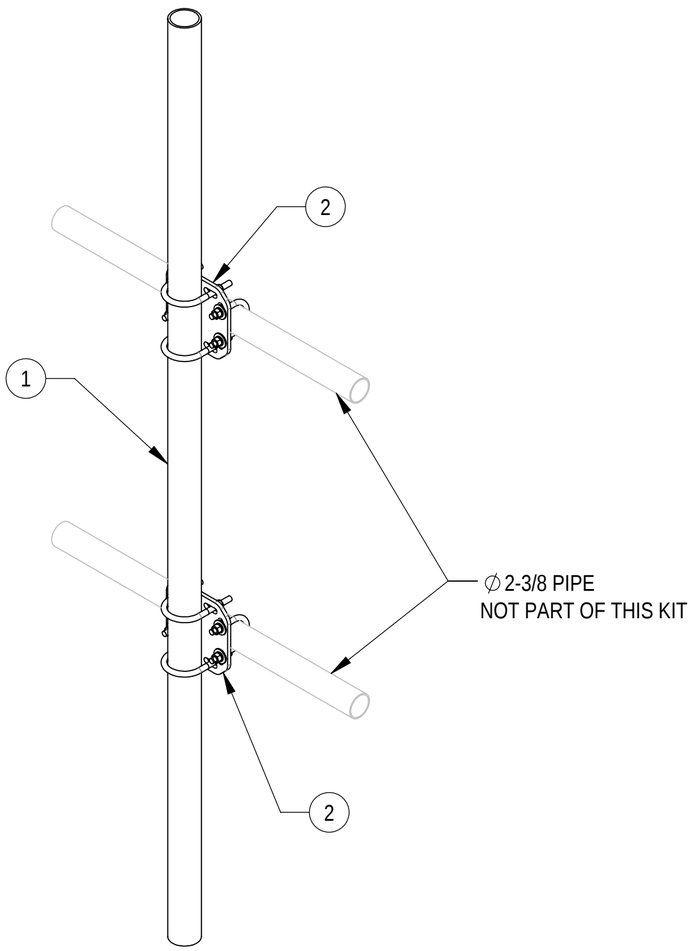

COMPONENT PART NUMBERS PROVIDED FOR ASSEMBLY PURPOSES;
INDIVIDUAL COMPONENTS MAY BE SHIPPED AS PARTS WITHIN AN INCLUDED KIT.

ITEM NO.	PART NUMBER	DESCRIPTION	QTY.	WEIGHT	NOTE NO.
1	MT54696	PIPE, 2.875"OD X 96"	1	45.96 LBS	
2	XP-2025	CROSSOVER PLATE KIT, 2-3/8 OD X 2-7/8 OD	2	8.07 LBS	

Confidential

DENSITY		lbs/in³
MASS	79.541	lbs
VOLUME	280.105	in³
SURFACE AREA	3125.538	in²
HEIGHT	96.0"	
LENGTH	7.0"	
WIDTH	6.0"	

ANDREW® an Amphenol company

TOLERANCES
1 PLACE .X[.X] ± 0.2[6.3]
2 PLACE .XX[.X] ± 0.12[3.0]
3 PLACE .XXX[.X] ± 0.060[1.5]
ANGLES ± 2°

SAP MATERIAL MASTER: SF-PK-278-DSHKIT

FINISH

MATERIAL

UNLESS OTHERWISE SPECIFIED DIMENSIONS ARE IN INCHES INTERPRET PER ANSI Y 14.5M-1994

	NAME	DATE
CE	RJC	05/21/21
RW	YX1027	01/20/2026
AD	YMENG	01/20/2026
RE	YMENG	02/04/2026

ECN 50106610AMO

TITLE: KIT, SF 96" ANTENNA PIPE W/ MOUNTING HDW

SCALE: 1:10

DOCUMENT NO.: SF-PK-278-DSHKIT

SIZE: C

Auth Group: INSL

MODEL			DRAWING			SHEET
VERSION	STATUS	REVISION	VERSION	STATUS	REVISION	
00	RE	A	01	RE	B	1 OF 1