1.0 GENERAL NOTES
- 1.1 ALL METRIC DIMENSIONS ARE IN BRACKETS [X. X]
- 1.2 FOR PATENT INFO: https://www.adwpat.com

2.0 DESIGN NOTES

3.0 MANUFACTURING/SPECIAL REQUIREMENTS
- 3.1 TIGHTEN ALL BOLTS 3/8" OR LARGER SECURING FLAT PLATES SNUG TIGHT. TIGHTEN ALL THREADED RODS SNUG TIGHT, WITH ATTENTION TO LEAVE EQUAL DISTANCE AND EQUAL FORCE ON EACH LEG OF THREADED ROD.
- 3.2 SNUG TIGHT IS DEFINED AS THE CONDITION OBTAINED WITH A FEW IMPACTS OF AN IMPACT WRENCH OR THE FULL EFFORT OF AN INSTALLER USING AN ORDINARY SPUD WRENCH TO BRING THE CONNECTED LAYERS (PLIES) OF STEEL INTO FULL CONTACT.
- 3.3 FOR BOLTS IN A PATTERN, TIGHTEN IN A CRISS-CROSS OR STAR SEQUENCE, INCREASING TORQUE IN GRADUAL STEPS UNTIL SNUG TIGHT.

4.0 TEST

5.0 PACKAGING
- 5.1 PACKAGING SHALL MEET ANDREW REQUIREMENTS PER DOCUMENT IS-PL-3005
- 5.2 PRINTED DOCUMENT TO BE PLACED INSIDE POLYBAG AND THEN IN SHIPPING CONTAINER
- 5.3 EXTRA HARDWARE MAY BE SUPPLIED, BAGGED AND SHIPPED

REVISIONS			
REV.	DESCRIPTION	DATE	APPROVED
A	INITIAL RELEASE	ACG 09FEB05	TP
B	UPDATE HARDWARE KIT	ACG 07MAR06	TP
C	UPDATED DRAWING FORMAT	NSUN 28JAN26	BA1025 50106805AMO

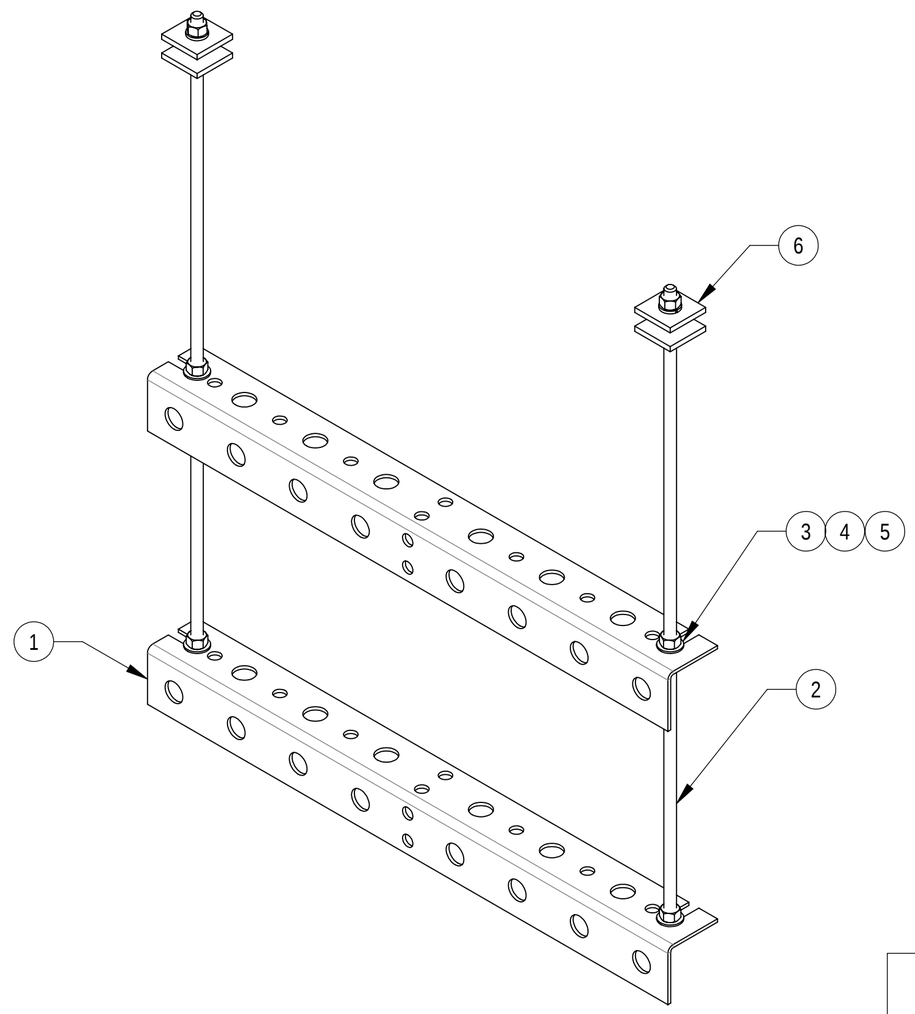

COMPONENT PART NUMBERS PROVIDED FOR ASSEMBLY PURPOSES;
INDIVIDUAL COMPONENTS MAY BE SHIPPED AS PARTS WITHIN AN INCLUDED KIT.

ITEM	PART NO.	DESCRIPTION	QTY.	WEIGHT	NOTE NO.
1	WBT24302	HORIZONTAL TRAPEZE SECTION	2	2.68 LBS	
2	MT-373-24	3/8" X 24" SS THREADED ROD	2	0.75 LBS	
3	SWF-03	3/8" SS FLAT WASHER	8	0.01 LBS	
4	SWL-03	3/8" SS LOCK WASHER	6	0.01 LBS	
5	SN-03	3/8" SS HEX NUT	12	0.02 LBS	
6	MT-387	SQUARE WASHER 1-1/2"X1-1/2" W/ 7/16 HOLE	4	0.11 LBS	

ANDREW® an Amphenol company

TOLERANCES
1 PLACE .X[.X] ± 0.06[1.5]
2 PLACE .XX[.X] ± 0.03[0.8]
3 PLACE .XXX[.X] ± 0.010[0.3]
ANGLES ± 2°

SAP MATERIAL MASTER: WB-TD24

FINISH

MATERIAL

UNLESS OTHERWISE SPECIFIED DIMENSIONS ARE IN INCHES INTERPRET PER ANSI Y 14.5M-1994

	NAME	DATE
CE	ACG	09FEB05
RW	NSUN	01/28/2026
AD	YMENG	02/04/2026
RE	YMENG	03/01/2026

ECN 50106805AMO

TITLE: TRAPEZE KIT, 24" WIDE, 2 RUNG

SCALE: 1:4

DOCUMENT NO.: WB-TD24

DENSITY		lbs/in³
MASS	7.60	lbs
VOLUME	26.98	in³
SURFACE AREA	450.56	in²
HEIGHT	25.2"	
LENGTH	22.0"	
WIDTH	2.1"	

SIZE: C

Auth Group: INSL

MODEL			DRAWING			SHEET
VERSION	STATUS	REVISION	VERSION	STATUS	REVISION	
02	RE	D	01	RE	C	1 OF 1

Confidential