1.0 GENERAL NOTES
- 1.1 ALL METRIC DIMENSIONS ARE IN BRACKETS [X. X]
- 1.2 FOR PATENT INFO: https://www.adwpat.com

2.0 DESIGN NOTES
- 2.1 ANY HAZARDS OR OBSTRUCTIONS TO THE CLIMBING FACILITY AND SAFETY CLIMB MUST BE IDENTIFIED PRIOR TO INSTALLING THE APPURTENANCE. ADDITIONAL PRODUCTS MAY BE REQUIRED TO MAINTAIN THE INTEGRITY OF THE SAFETY CLIMB. DURING INSTALLATION, TEMPORARY AND/OR PERMANENT PRECAUTIONARY MEASURES SHOULD BE TAKEN TO PRESERVE THE CLIMBING FACILITY AND/OR SAFETY CLIMB.

3.0 MANUFACTURING/SPECIAL REQUIREMENTS
- 3.1 TIGHTEN ALL BOLTS 3/8" OR LARGER SECURING FLAT PLATES SNUG TIGHT. TIGHTEN ALL U-BOLTS/THREADED RODS SNUG TIGHT, WITH ATTENTION TO LEAVE EQUAL DISTANCE AND EQUAL FORCE ON EACH LEG OF U-BOLT/THREADED ROD.
- 3.2 SNUG TIGHT IS DEFINED AS THE CONDITION OBTAINED WITH A FEW IMPACTS OF AN IMPACT WRENCH OR THE FULL EFFORT OF AN INSTALLER USING AN ORDINARY SPUD WRENCH TO BRING THE CONNECTED LAYERS (PLIES) OF STEEL INTO FULL CONTACT.
- 3.3 FOR BOLTS IN A PATTERN, TIGHTEN IN A CRISS-CROSS OR STAR SEQUENCE, INCREASING TORQUE IN GRADUAL STEPS UNTIL SNUG TIGHT.

4.0 TEST

5.0 PACKAGING
- 5.1 PACKAGING SHALL MEET ANDREW REQUIREMENTS PER DOCUMENT IS-PL-3005
- 5.2 PRINTED DOCUMENT TO BE PLACED INSIDE POLYBAG AND THEN IN SHIPPING CONTAINER
- 5.3 EXTRA HARDWARE MAY BE SUPPLIED, BAGGED AND SHIPPED

REVISIONS			
REV.	DESCRIPTION	DATE	APPROVED
K	INITIAL RELEASE	YX1027 27AUG25	BA1025 50104621AMO
L	ADDED PIPE/TUBE RANGE	NSUN 13APR26	BA1025 50107913AMO

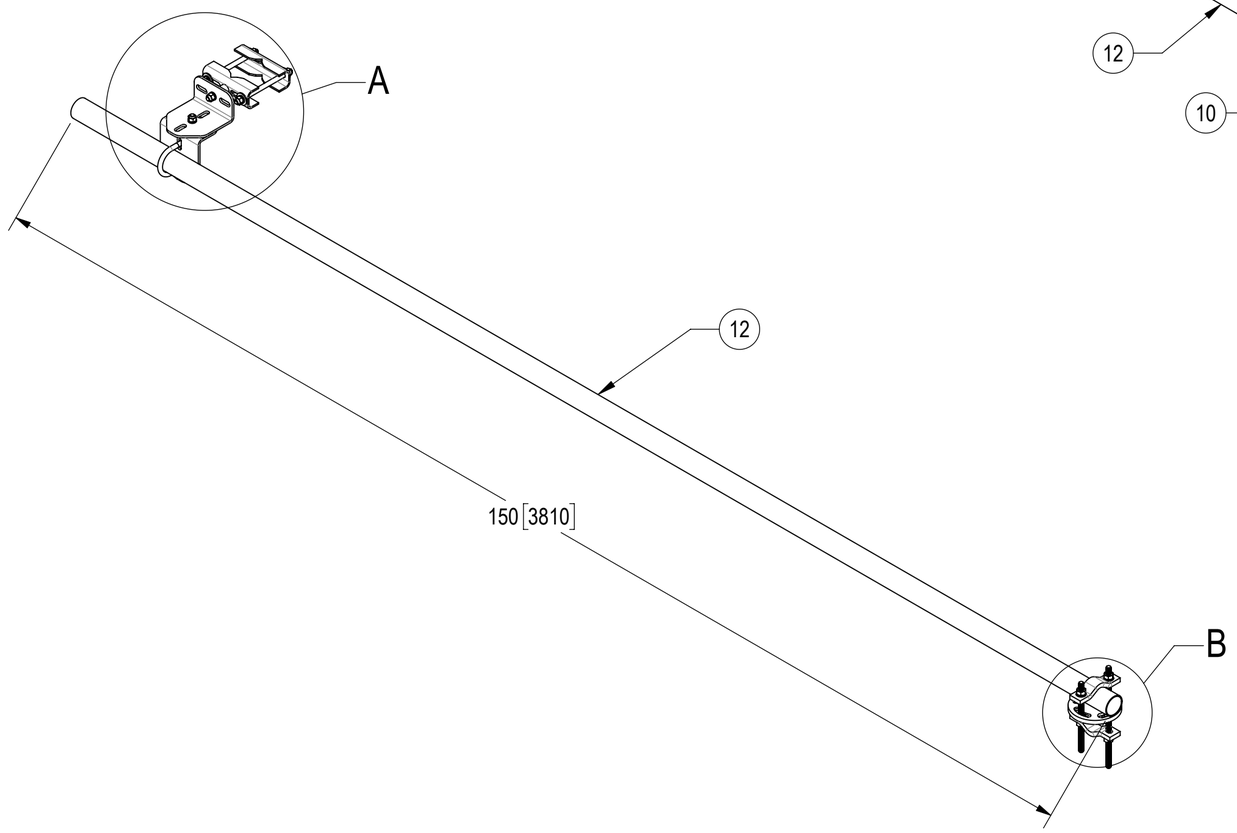

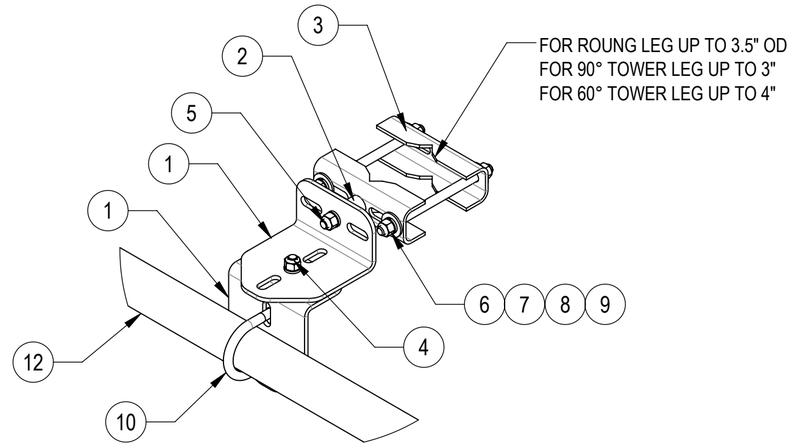

DETAIL A
SCALE 1 : 6

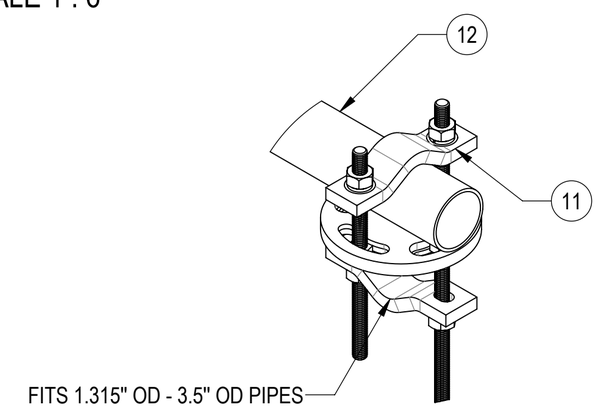

DETAIL B
SCALE 1 : 4

COMPONENT PART NUMBERS PROVIDED FOR ASSEMBLY PURPOSES;
INDIVIDUAL COMPONENTS MAY BE SHIPPED AS PARTS WITHIN AN INCLUDED KIT.

ITEM NO.	PART NUMBER	DESCRIPTION	QTY.	WEIGHT	NOTE NO.
1	XAU01	ANGLE, CROSSOVER, 1.9-3.5" X 1.9-3.5" OD	2	2.98 LBS	
2	OS15034	3/4" X 1-1/2" OFFSET COLLAR	1	0.14 LBS	
3	SAB01	FORMED CLAMP	2	1.35 LBS	
4	GB-04125	1/2" X 1-1/4" GALV BOLT KIT	1	0.12 LBS	
5	GB-04265	1/2" X 2-3/4" GALV BOLT KIT	1	0.20 LBS	
6	GN-04	1/2" GALV HEX NUT	4	0.04 LBS	
7	GWL-04	1/2" GALV LOCK WASHER	4	0.01 LBS	
8	GWF-04	1/2" GALV FLAT WASHER	4	0.04 LBS	
9	MT-379-8	1/2" X 8" GALV THREADED ROD	2	0.44 LBS	
10	GUB-4240	1/2" X 2-1/2" X 4" GALV U-BOLT	1	0.56 LBS	
11	XP-R	CROSSOVER PLATE, ROUND, UP TO 3.5" OD	1	6.20 LBS	
12	MT-651-150	2.375" OD X 150" PIPE	1	36.34 LBS	

ANDREW® an Amphenol company

TOLERANCES
1 PLACE .X[.X] ± 0.12[3.0]
2 PLACE .XX[.X] ± 0.06[1.5]
3 PLACE .XXX[.X] ± 0.03[0.8]
ANGLES ± 2°

SAP MATERIAL MASTER: **SA-B12**

FINISH

MATERIAL

UNLESS OTHERWISE SPECIFIED DIMENSIONS ARE IN INCHES INTERPRET PER ANSI Y 14.5M-1994

	NAME	DATE
CE	YX1027	27AUG25
RW	YMENG	04/15/2026
AD	NSUN	04/17/2026
RE	YMENG	04/27/2026

ECN 50107913AMO

TITLE: **STIFF ARM BRACKET, 2 3/8" X 150" PIPE**

SCALE: **1:16**

DOCUMENT NO.: **SA-B12**

DENSITY		lbs/in³
MASS	53.79	lbs
VOLUME	190.00	in³
SURFACE AREA	2739.13	in²
HEIGHT	11.6"	
LENGTH	150.0"	
WIDTH	17..9"	

SIZE: **C**

Auth Group: INSL

MODEL			DRAWING			SHEET
VERSION	STATUS	REVISION	VERSION	STATUS	REVISION	
03	RE	L	01	RE	L	1 OF 1

Confidential